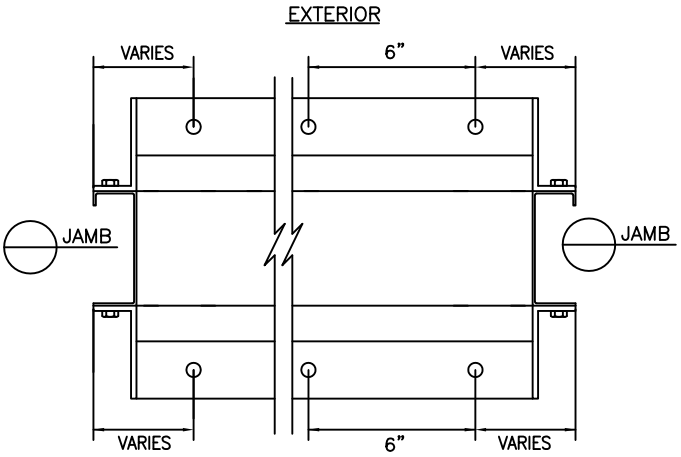

PLAN VIEW

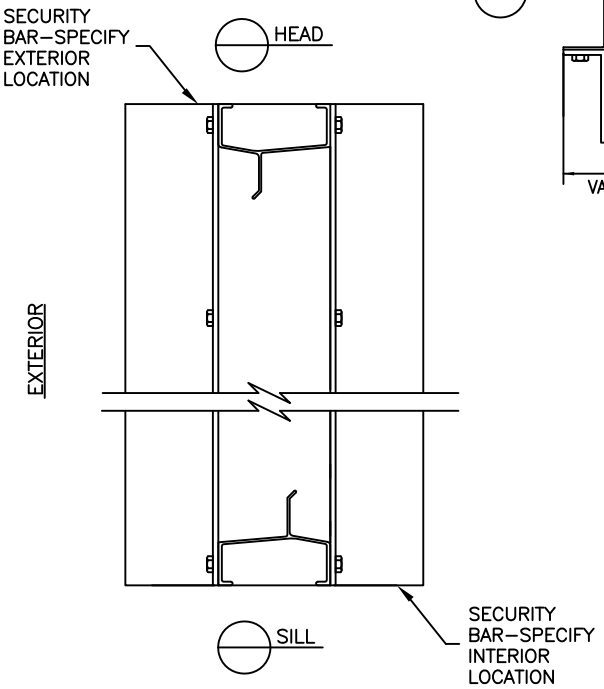

SECTION VIEW

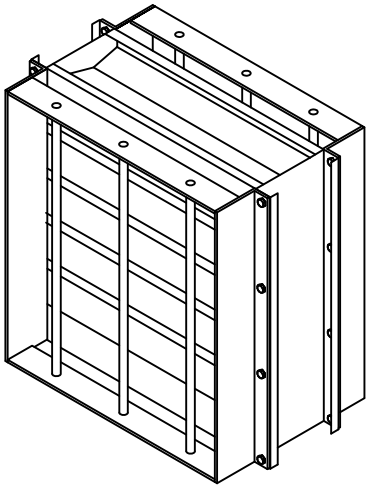

SCHEDULE		
ITEM NO.	QUANTITY	SPECIFY SECURITY BAR LOCATION (INTERIOR/EXTERIOR)

AIROLITE®
The look that works.™

DRAWN BY:	**LOUVER DETAIL: VERTICAL SECURITY BARS**	
SCALE: NONE		
DATE: 4/2010	REV. NO: 1	FORM NO:

© COPYRIGHT 2007, THE AIROLITE CO. LLC