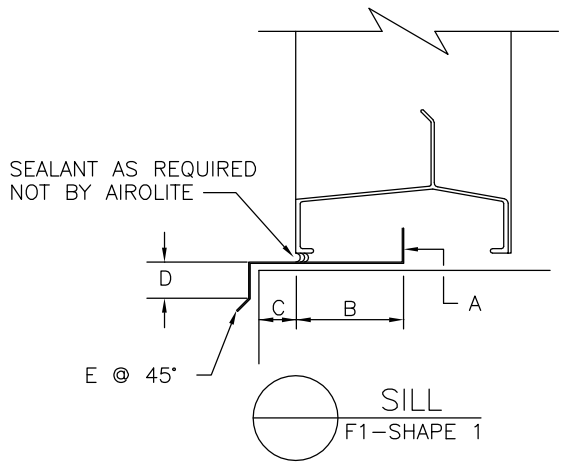

NOTE: NOT FOR USE WITH CONTINUOUS BLADE LOUVER TYPES.

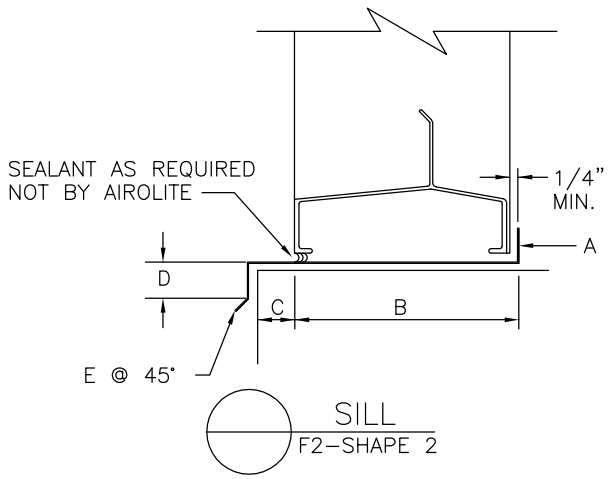

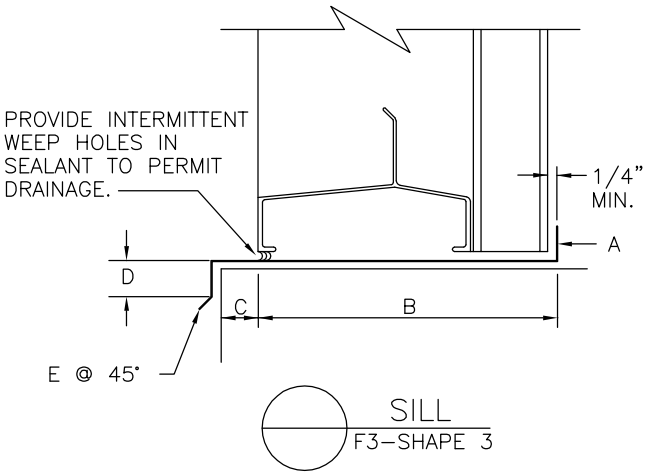

NOTE: RECOMMENDED FOR CONTINUOUS BLADE LOUVER TYPES.

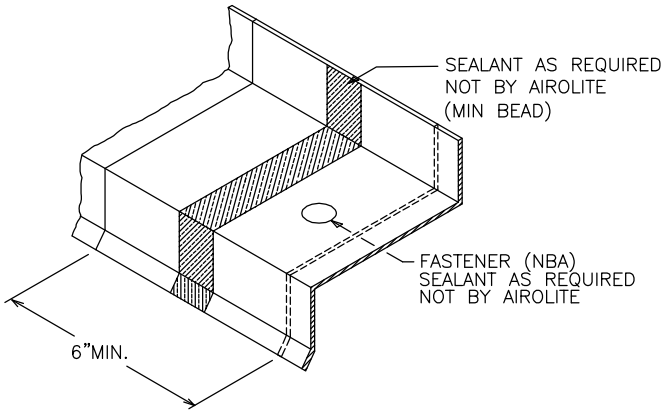

RECOMMENDED LAP DETAIL FOR FLASHING

SILL FLASHING SCHEDULE										
ITEM NO.	QUANTITY	SILL TYPE	MAT'L	GAUGE	A	B	C	D	E	FINISH

NOTE: LIST 0 IN COLUMN D WHEN OFFSET IS NOT REQUIRED

AIROLITE®
The look that works.™

DRAWN BY:		TYPICAL LOUVER DETAIL: SILL FLASHING
SCALE: NONE		
DATE: 10/95	REV. NO: 0	FORM NO: 623041

© COPYRIGHT 2007, THE AIROLITE CO. LLC