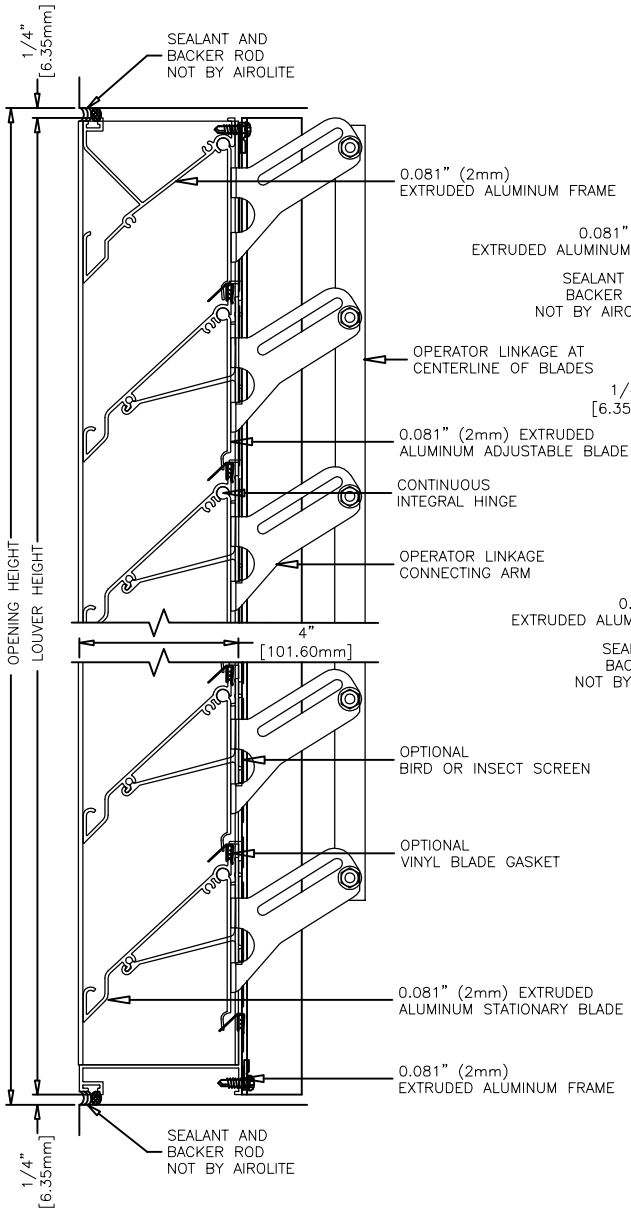

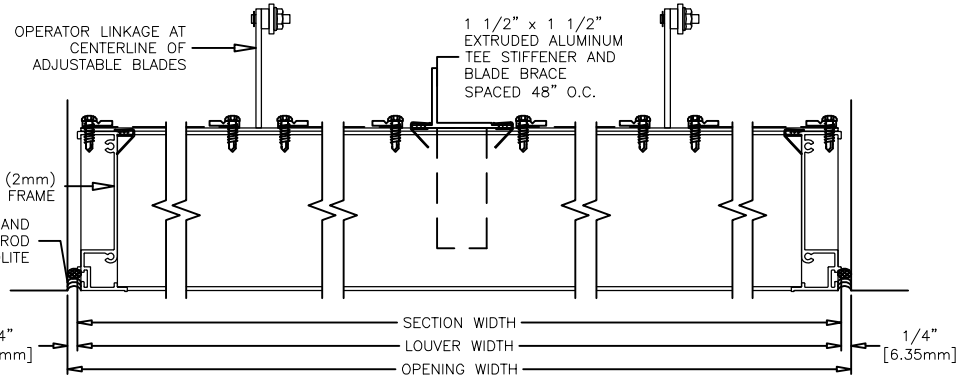

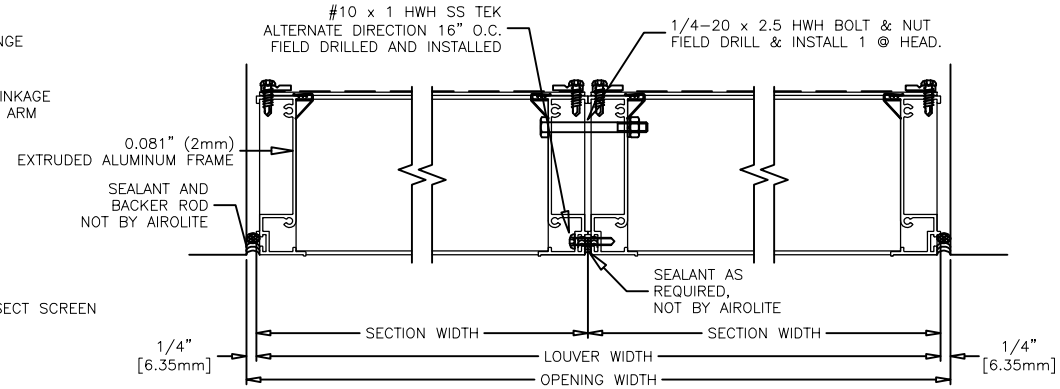

VISIBLE VERTICAL MULLION

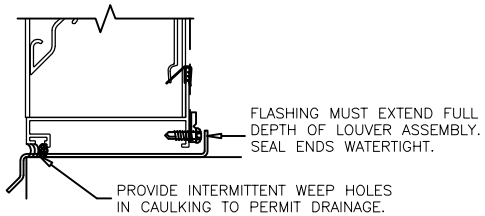

FLASHING OPTION

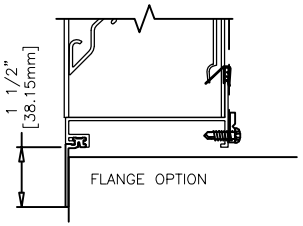

FLANGE OPTION

AIROLITE® The look that works.™

MODEL: K8504

SHEET: 1 OF 1

© COPYRIGHT 2008, THE AIROLITE CO. LLC