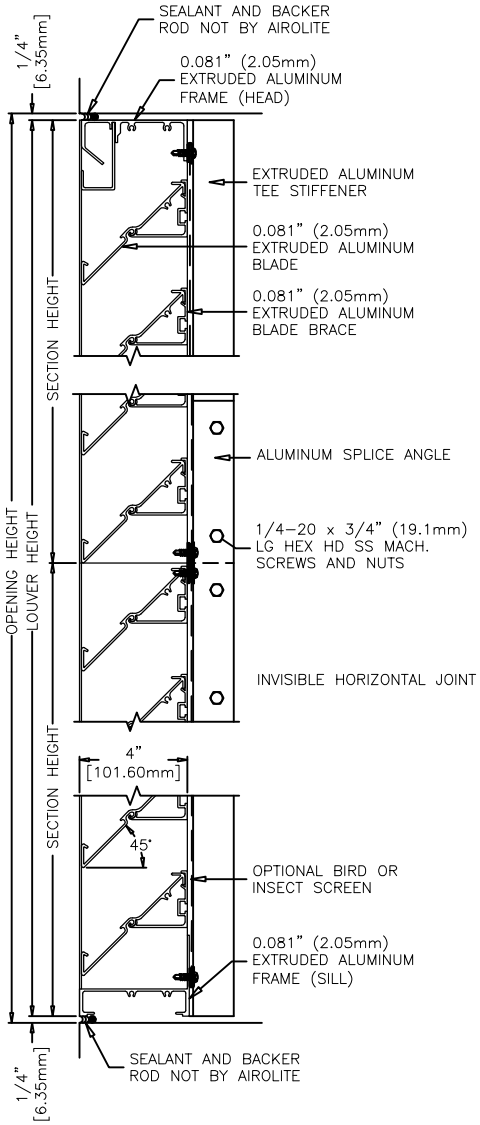

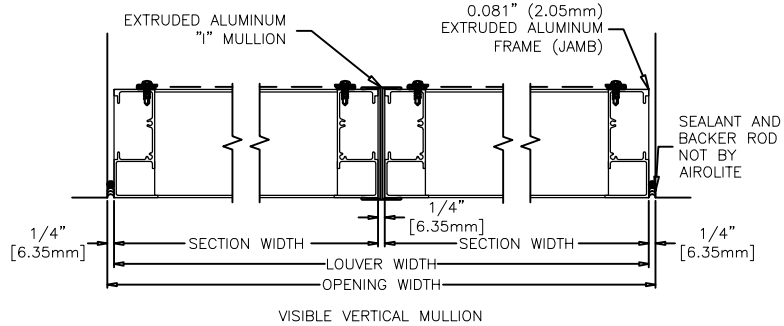

VISIBLE VERTICAL MULLION

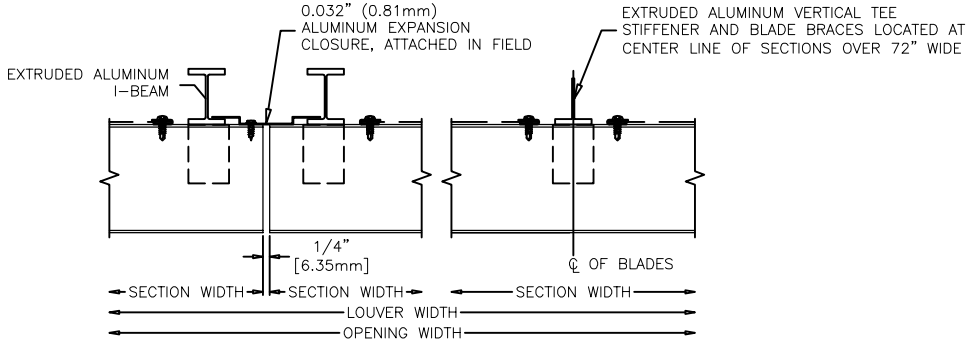

CONCEALED VERTICAL MULLION

TEE STIFFENER

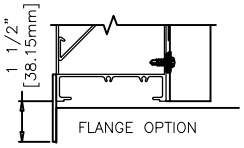

FLANGE OPTION

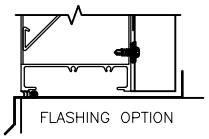

FLASHING OPTION

AIROLITE®
The look that works.™

MODEL: K6774

SHEET: 1 OF 1

© COPYRIGHT 2008, THE AIROLITE CO. LLC