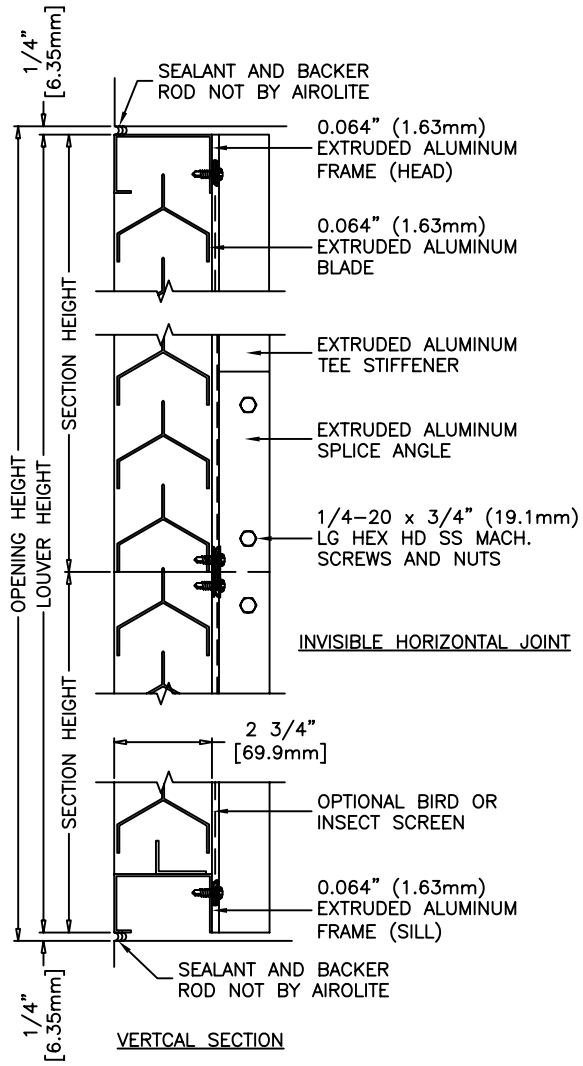

VERTCAL SECTION

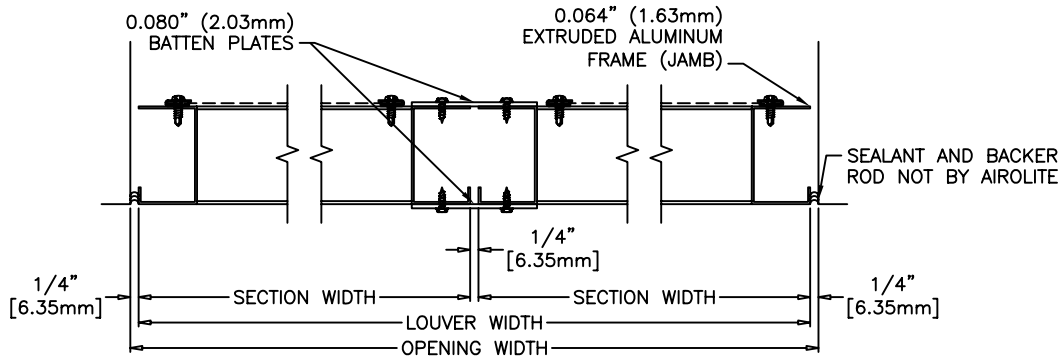

VISIBLE VERTICAL MULLION

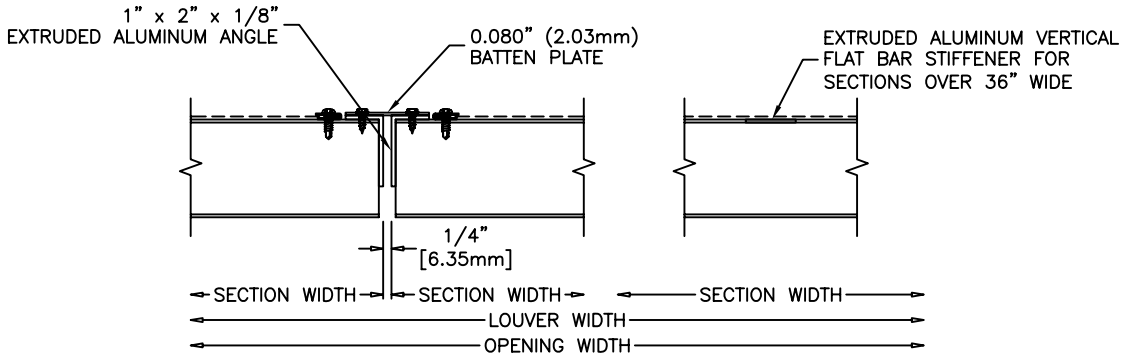

CONCEALED VERTICAL MULLION

BAR STIFFENER

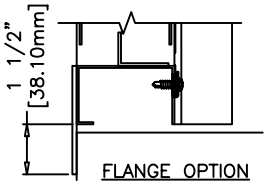

FLANGE OPTION

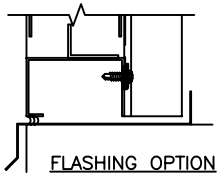

FLASHING OPTION

This drawing and the design represented are the confidential and proprietary property of The Airolite Company, LLC and may not be disclosed, loaned, copied or used for any purpose other than design review and approval without the expressed written consent of The Airolite Company, LLC..

AIROLITE®
The look that works.™
Marietta, Ohio USA

MODEL: T5833 SHEET: 1