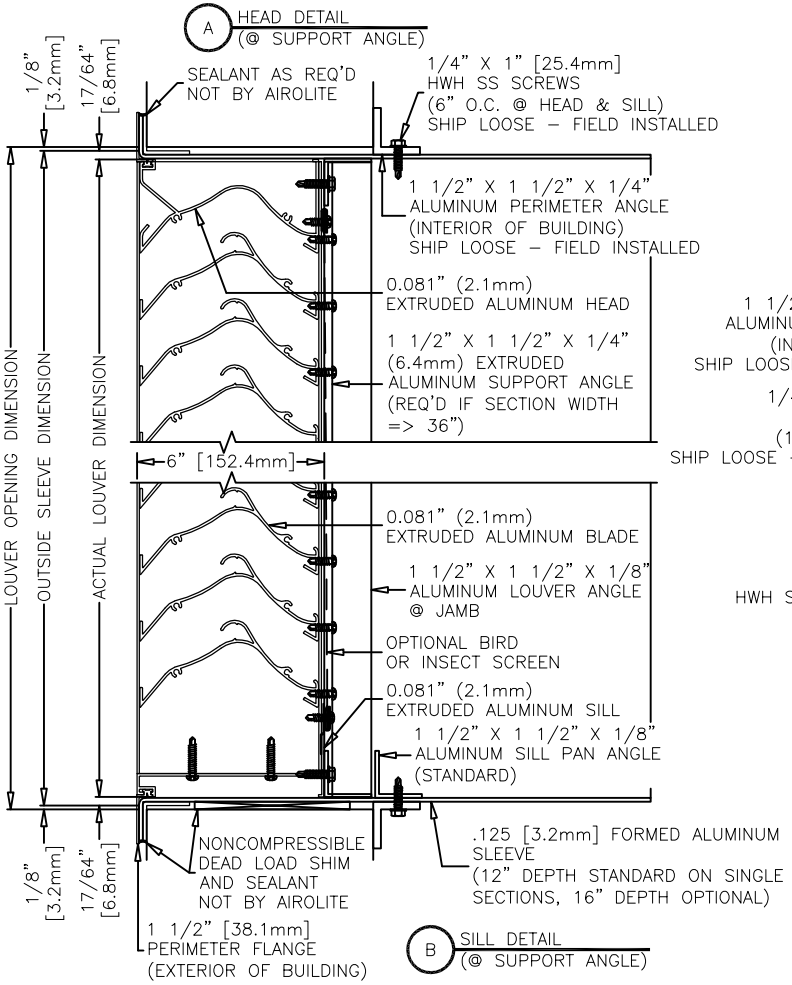

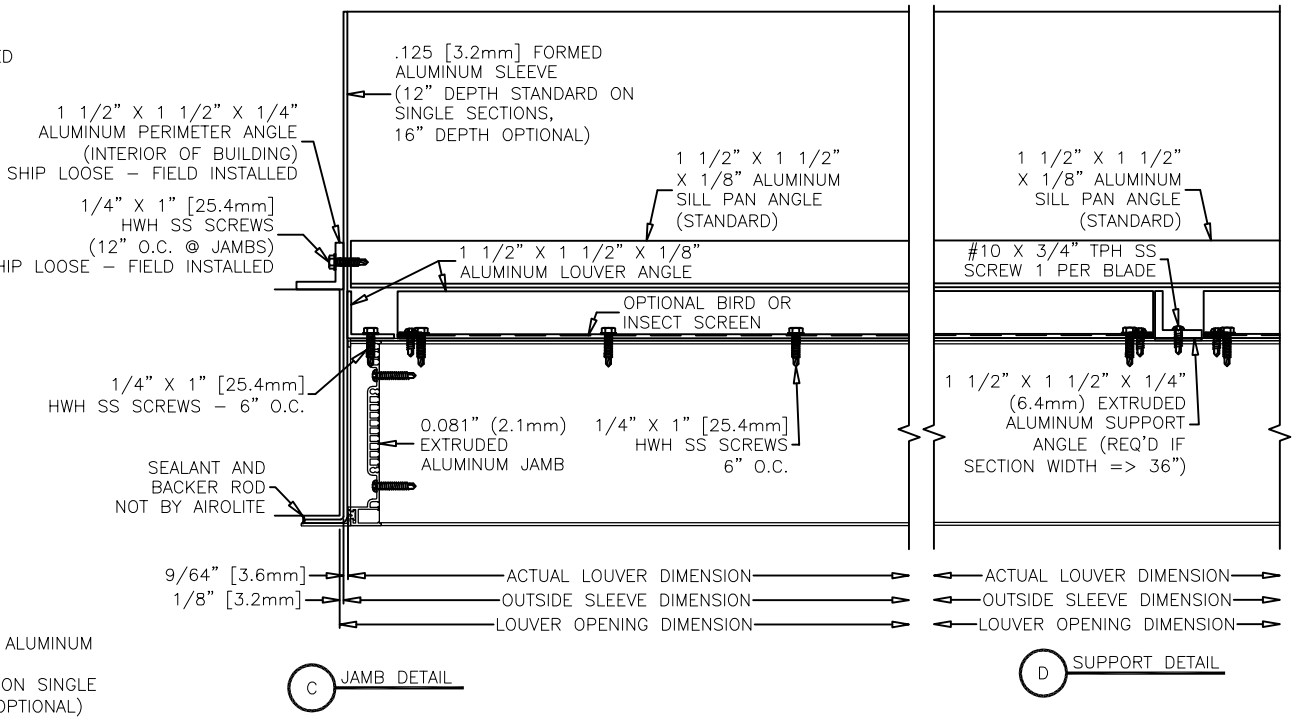

AIROLITE®
The look that works.™

MODEL: SCH601MD

SHEET: 1 OF 3

© COPYRIGHT 2008, THE AIROLITE CO. LLC

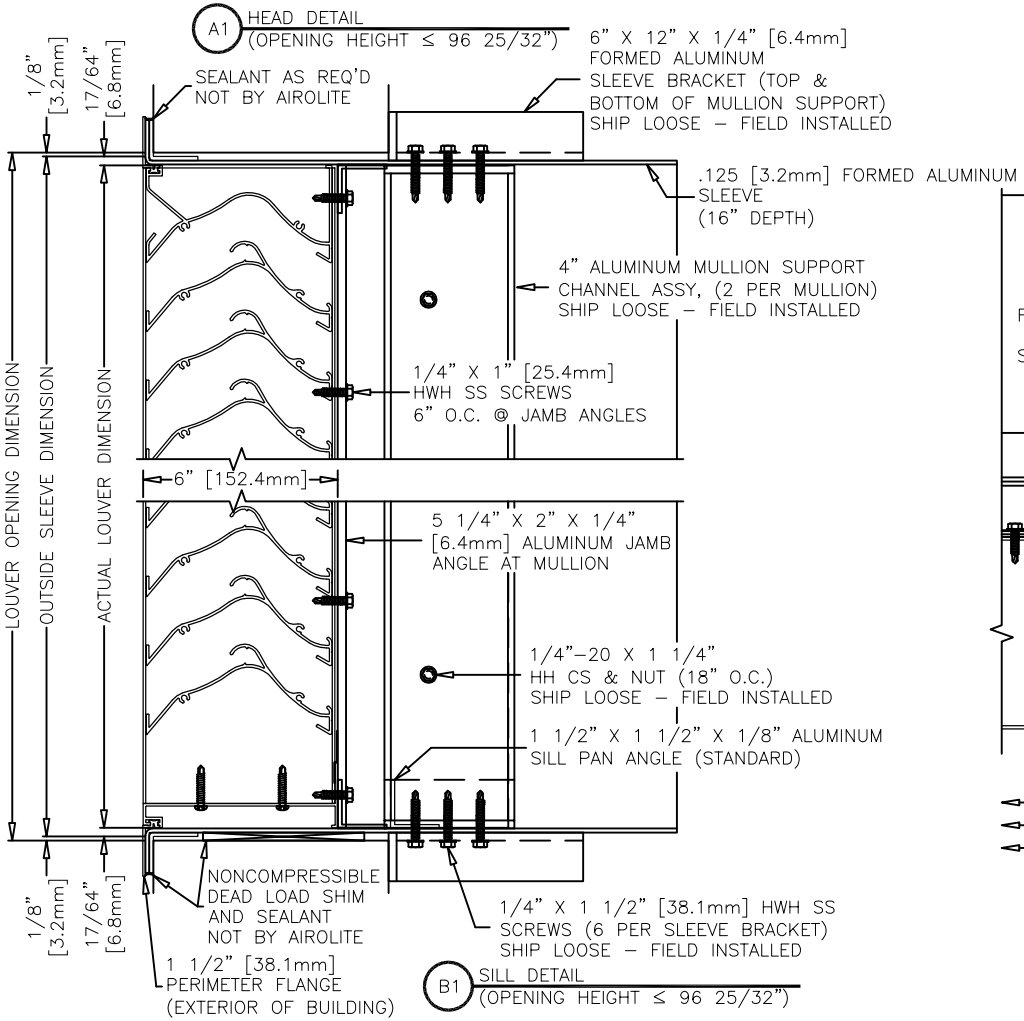

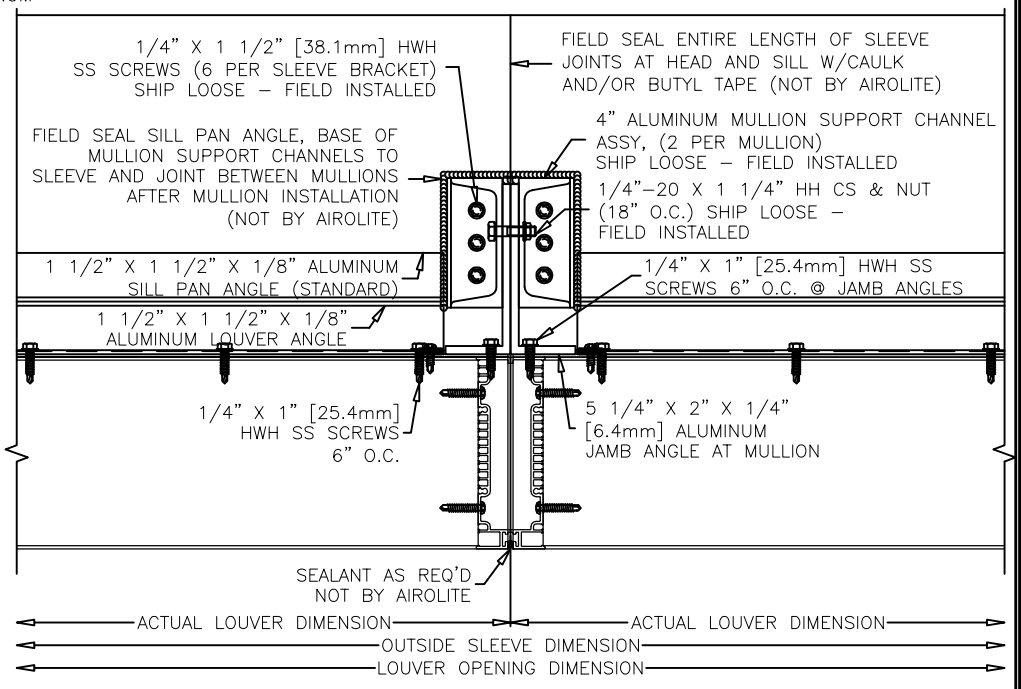

AIROLITE®
The look that works.™

MODEL: SCH601MD

SHEET: 2 OF 3

© COPYRIGHT 2008, THE AIROLITE CO. LLC

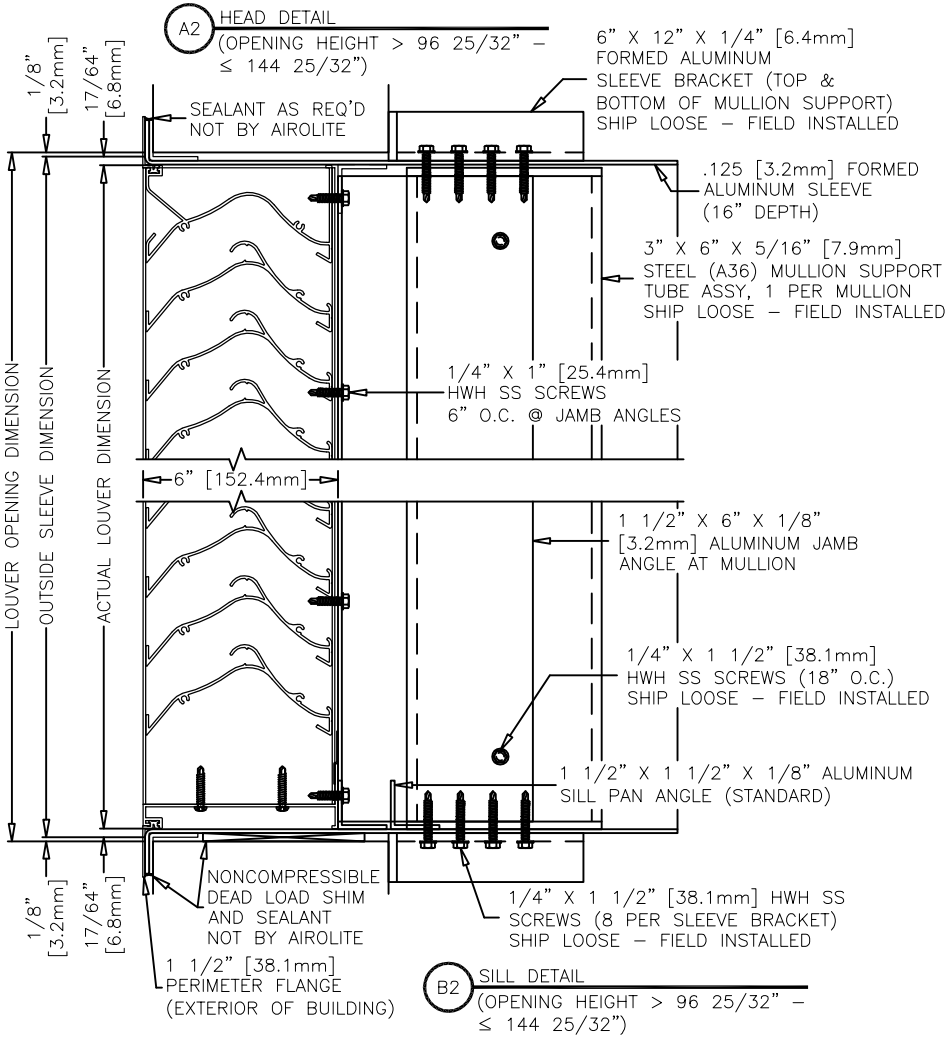

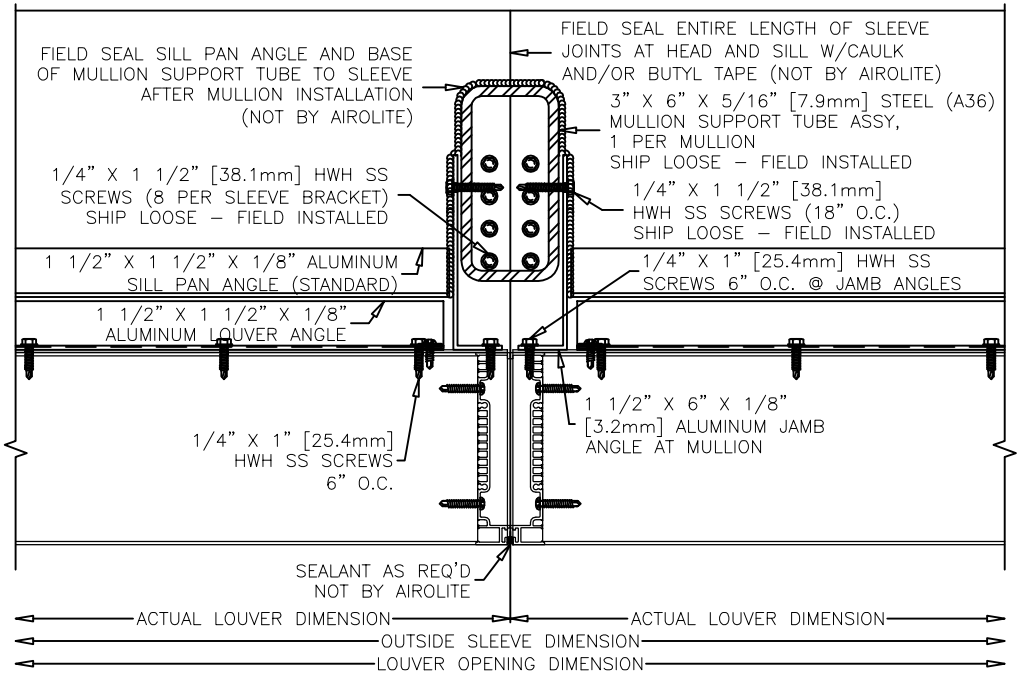

AIROLITE®
The look that works.™

MODEL: SCH601MD

SHEET: 3 OF 3

© COPYRIGHT 2008, THE AIROLITE CO. LLC