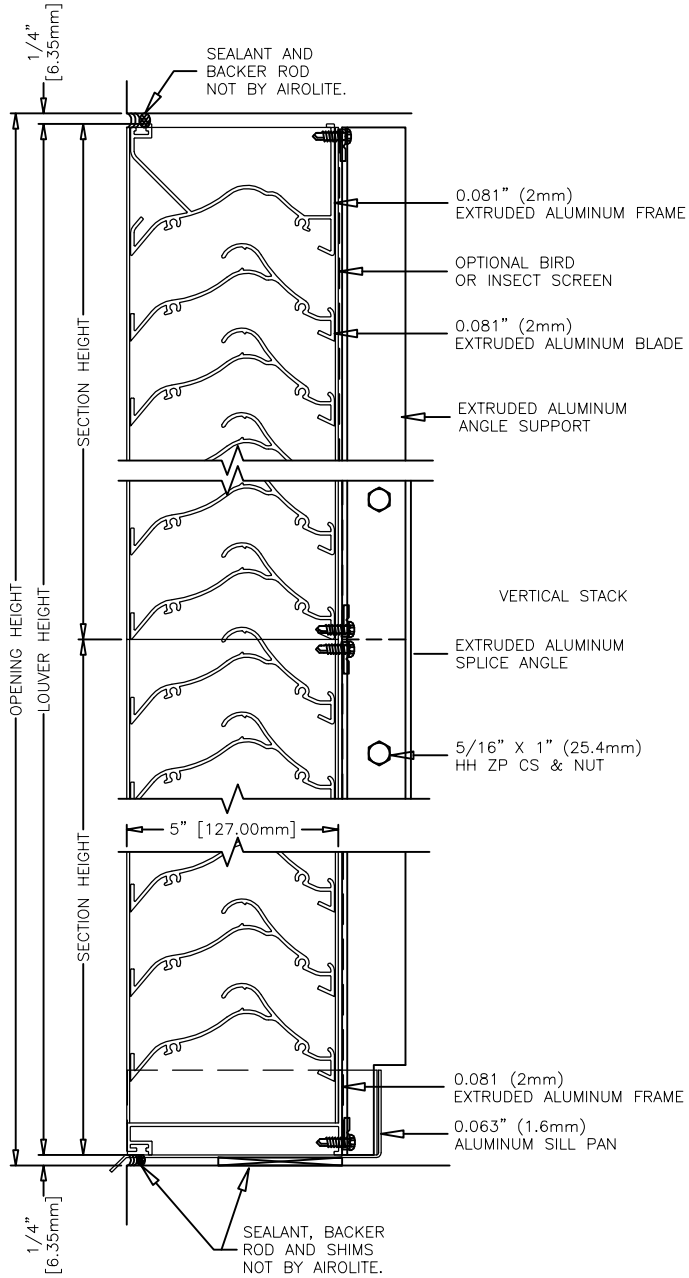

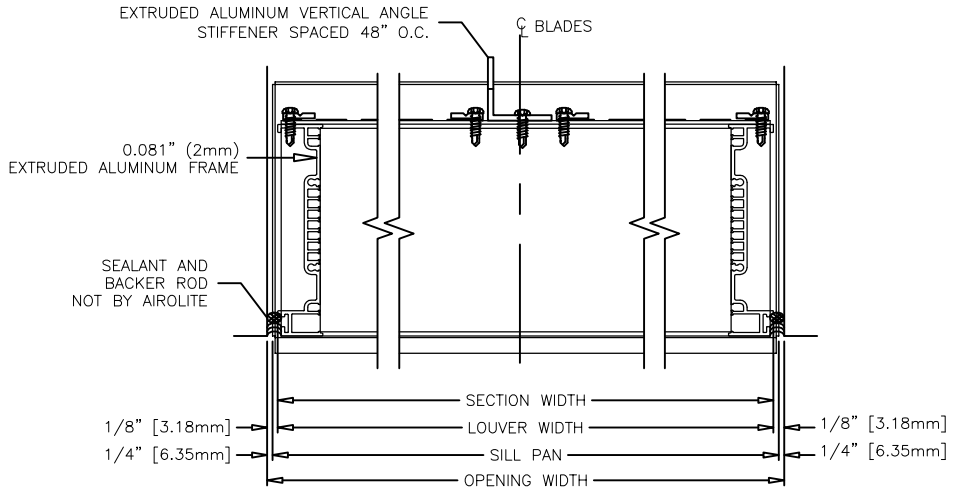

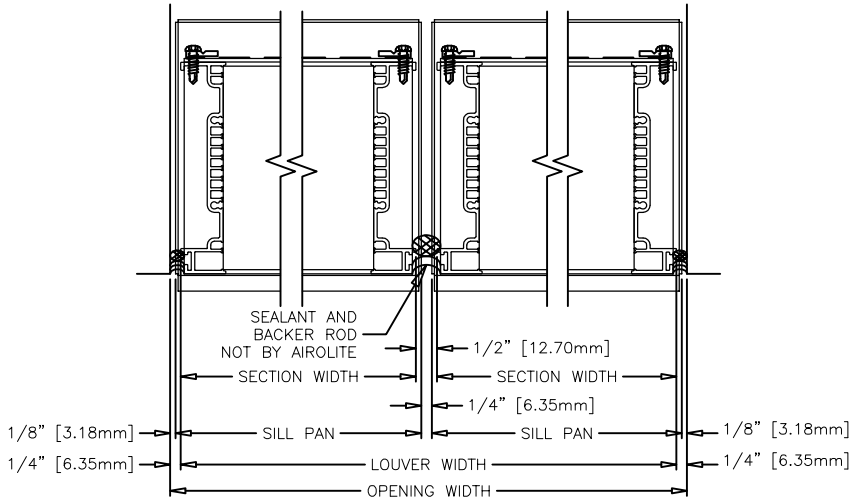

VISIBLE VERTICAL MULLION

AIROLITE® The look that works.™

MODEL: SCH501

SHEET: 1 OF 1

© COPYRIGHT 2008, THE AIROLITE CO. LLC