Surface Mount, Masonry and Stucco

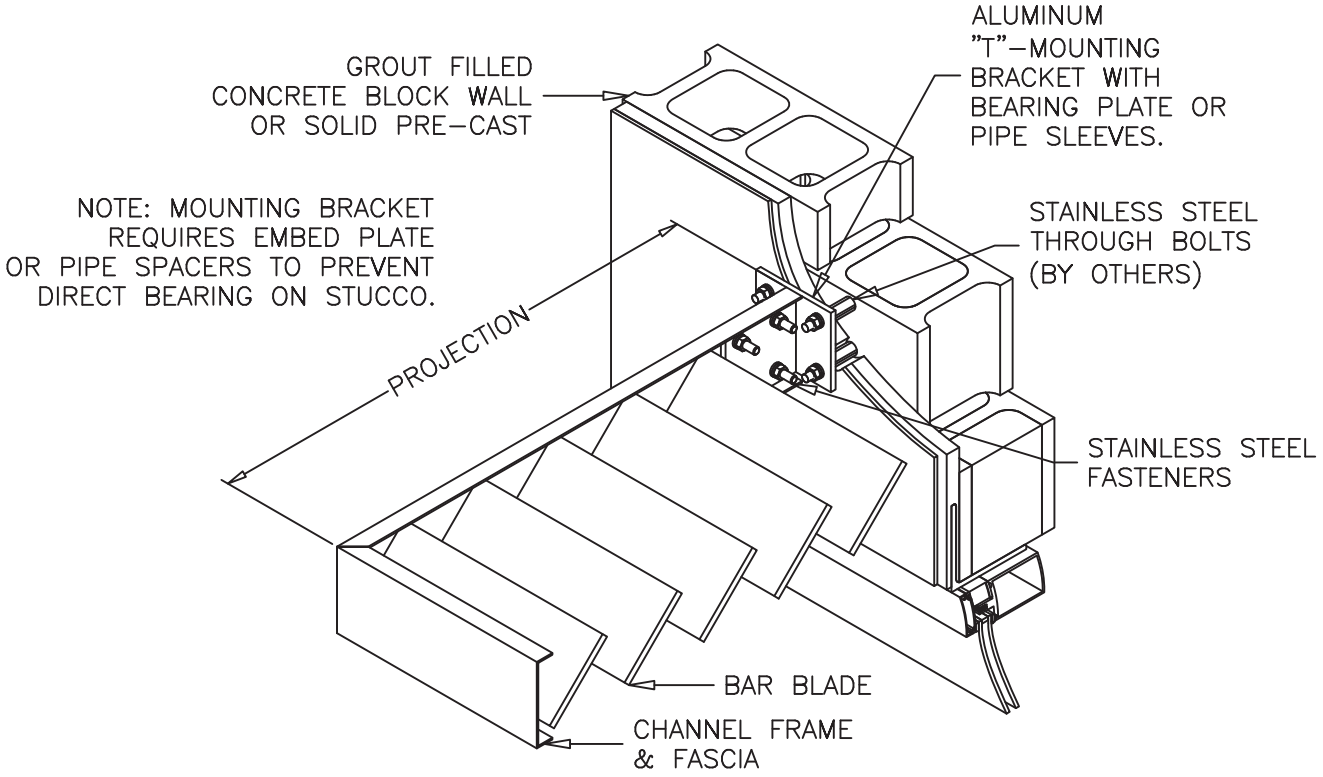

Copyright © 2006 The Airolite Company, LLC